Work Order ID 56587

March 2, 2010 7:41:42 AM

Item ID: D350-591-311 **Accept** **Setup Start** **Stop**

Revision ID:

Item Name: Heli-Access-Step, Long LH

Start Date: 3/02/10 **Start Qty:** 10.00 **Cust Item ID:**

Required Date: 3/09/10 **Req'd Qty:** 10.00 **Customer:**

Reference:

Approvals: **Process Plan:** _____ **Date:** _____ **Tooling:** _____ **Date:** _____ **Run Start** **Stop**

QC: _____ **Date:** _____ **SPC (Y/N):** _____ **Date:** _____

Sequence ID/ Work Center ID	Operation Description	Set Up/ Run Hours	Draw Number	Draw Rev.	Plan Code	Accept Qty	Reject Qty	Reject Number	Insp. Stamp

Draw Nbr	Revision Nbr
D3272	Rev B

100 — 0.00

DOCUMENT CONTROL

DC — Document Control

Memo — 0.00

Photocopy bluefile and type labels as per PPP D350-591-311 CHG001 8 10/03/34

I (E.D.) Put holes on LH Steps 8 10/3/31

110 — 0.00

Large Fab

Large Fab — Large Fab

Memo — 0.00

10

1-Bevel end for welding FWD ONLY

2-Weld Support using Jig DT8719, weld Fwd End Plate as per QSI 004 & Dwg D3272

A/R[][]Aluminum Rod[] M111311 M110130

10·03·18

3-Grind End Plate flush

Dart Aerospace Ltd

W/O:		WORK ORDER CHANGES					
DATE	STEP	PROCEDURE CHANGE	By	Date	Qty	Approval Chief Eng / Prod Mgr	Approval QC Inspector

Part No: _____ **PAR #:** _____ **Fault Category:** _____ **NCR:** Yes No **DQA:** _____ **Date:** _____

Resolution: _____ **Disposition:** _____ **QA: N/C Closed:** _____ **Date:** _____

NCR:		WORK ORDER NON-CONFORMANCE (NCR)						
DATE	STEP	Description of NC Section A	Corrective Action Section B			Verification Section C	Approval Chief Eng	Approval QC Inspector
			Initial Chief Eng	Action Description Chief Eng	Sign & Date			

NOTE: Date & initial all entries

H:\fFORMS\Quality Assurance\approved QA\NCRWO RevE

Work Order ID 56587

March 2, 2010 7:41:42 AM

Item ID: D350-591-311 **Accept** **Setup Start**

Revision ID: **Stop**

Item Name: Heli-Access-Step, Long LH

Start Date: 3/02/10 **Start Qty:** 10.00 **Cust Item ID:**

Required Date: 3/09/10 **Req'd Qty:** 10.00 **Customer:**

Reference:

Run Start

Approvals: **Process Plan:** **Date:** **Tooling:** **Date:**

Stop

QC: **Date:** **SPC (Y/N):** **Date:**

Sequence ID/ Work Center ID	Operation Description	Set Up/ Run Hours	Draw Number	Draw Rev.	Plan Code	Accept Qty	Reject Qty	Reject Number	Insp. Stamp
120	QC9- Inspect visual per QSI004- Fusion Welds	0.00							
QC	**Memo**	0.00				10	PD 10.03.18		
Quality Control									
130	QC5- Inspect part completeness to step on W/O	0.00 S 10/03/18							
QC	**Memo**	0.00				x10 MM			
Quality Control									
140	Chemical Conversion Coat per QSI005 4.1	0.00							
HandFinish	**Memo**	0.00 10-03-18				10			
Hand Finishing									

Dart Aerospace Ltd

W/O:		WORK ORDER CHANGES					
DATE	STEP	PROCEDURE CHANGE	By	Date	Qty	Approval Chief Eng / Prod Mgr	Approval QC Inspector

Part No: _____ **PAR #:** _____ **Fault Category:** _____ **NCR:** Yes No **DQA:** _____ **Date:** _____

Resolution: _____ **Disposition:** _____ **QA: N/C Closed:** _____ **Date:** _____

NCR:		WORK ORDER NON-CONFORMANCE (NCR)						
DATE	STEP	Description of NC Section A	Corrective Action Section B			Verification Section C	Approval Chief Eng	Approval QC Inspector
			Initial Chief Eng	Action Description Chief Eng	Sign & Date			

NOTE: Date & initial all entries

H:\fFORMS\Quality Assurance\approved QA\NCRWO RevE

Work Order ID 56587

March 2, 2010 7:41:47 AM

Item ID: D350-591-311 **Accept** **Setup Start** **Stop**

Revision ID:

Item Name: Heli-Access-Step, Long LH

Start Date: 3/02/10 **Start Qty:** 10.00 **Cust Item ID:**

Required Date: 3/09/10 **Req'd Qty:** 10.00 **Customer:**

Reference:

Run Start **Stop**

Approvals: **Process Plan:** **Date:** **Tooling:** **Date:**

QC: **Date:** **SPC (Y/N):** **Date:**

Sequence ID/ Work Center ID	Operation Description	Set Up/ Run Hours	Draw Number	Draw Rev.	Plan Code	Accept Qty	Reject Qty	Reject Number	Insp. Stamp
150	QC3- Inspect Part Finish	0.00	10/03/18			Y10	Ø		
QC	**Memo**	0.00							
Quality Control									
180		0.00							
Large Fab	Large Fab					10	Ø		
Large Fab	**Memo**	0.00							

1-Assemble Leg Assembly as per Dwg D3272.

2-Leave one rivet out until welding is complete.

3-Bevel Aft end for welding

4-Inspect for foreign object as per QSI 024

5-Weld Aft End Plate as per QSI 004 & Dwg D3272 10·03·24
A/R☐☐Aluminum Rod☐ M111311

6-Grind End Plate flush.

7-Install last rivet as per Dwg.

Dart Aerospace Ltd

W/O:		WORK ORDER CHANGES					
DATE	STEP	PROCEDURE CHANGE	By	Date	Qty	Approval Chief.Eng / Prod Mgr	Approval QC Inspector

Part No: _____ **PAR #:** _____ **Fault Category:** _____ **NCR:** Yes No **DQA:** _____ **Date:** _____

Resolution: _____ **Disposition:** _____ **QA: N/C Closed:** _____ **Date:** _____

NCR:		WORK ORDER NON-CONFORMANCE (NCR)						
DATE	STEP	Description of NC Section A	Corrective Action Section B			Verification Section C	Approval Chief Eng	Approval QC Inspector
			Initial Chief Eng	Action Description Chief Eng	Sign & Date			

NOTE: Date & initial all entries

H:\fFORMS\Quality Assurance\approved QA\NCRWO RevE

Work Order ID 56587

March 2, 2010 7:41:47 AM

Item ID: D350-591-311 **Accept** **Setup Start** **Stop**

Revision ID:

Item Name: Heli-Access-Step, Long LH

Start Date: 3/02/10 **Start Qty:** 10.00 **Cust Item ID:**

Required Date: 3/09/10 **Req'd Qty:** 10.00 **Customer:**

Reference:

Run Start **Stop**

Approvals: **Process Plan:** _____ **Date:** _____ **Tooling:** _____ **Date:** _____

QC: _____ **Date:** _____ **SPC (Y/N):** _____ **Date:** _____

Sequence ID/ Work Center ID	Operation Description	Set Up/ Run Hours	Draw Number	Draw Rev.	Plan Code	Accept Qty	Reject Qty	Reject Number	Insp. Stamp
190	QC9- Inspect visual per QSI004- Fusion Welds	0.00							
QC	Memo	0.00				10	PD 10.03.26		
Quality Control									
200	QC5- Inspect part completeness to step on W/O	0.00							
QC	Memo	0.00	8 10/03/26			10 LH			
Quality Control									
210	Chemical Conversion Coat per QSI005 4.1	0.00							
HandFinish	Memo	0.00	M 10/03/29			~~10 LH~~	0		
Hand Finishing									

Dart Aerospace Ltd

W/O:		WORK ORDER CHANGES					
DATE	STEP	PROCEDURE CHANGE	By	Date	Qty	Approval Chief Eng / Prod Mgr	Approval QC Inspector

Part No: _____ **PAR #:** _____ **Fault Category:** _____ **NCR:** Yes No **DQA:** _____ **Date:** _____

Resolution: _____ **Disposition:** _____ **QA: N/C Closed:** _____ **Date:** _____

NCR:		WORK ORDER NON-CONFORMANCE (NCR)						
DATE	STEP	Description of NC Section A	Corrective Action Section B			Verification Section C	Approval Chief Eng	Approval QC Inspector
			Initial Chief Eng	Action Description Chief Eng	Sign & Date			

NOTE: Date & initial all entries

H:\fFORMS\Quality Assurance\approved QA\NCRWO RevE

Work Order ID 56587

March 2, 2010 7:41:47 AM

Item ID: D350-591-311 **Accept** **Setup Start** **Stop**

Revision ID:

Item Name: Heli-Access-Step, Long LH

Start Date: 3/02/10 **Start Qty:** 10.00 **Cust Item ID:**

Required Date: 3/09/10 **Req'd Qty:** 10.00 **Customer:**

Reference:

Run Start **Stop**

Approvals: **Process Plan:** _____ **Date:** _____ **Tooling:** _____ **Date:** _____

QC: _____ **Date:** _____ **SPC (Y/N):** _____ **Date:** _____

Sequence ID/ Work Center ID	Operation Description	Set Up/ Run Hours	Draw Number	Draw Rev.	Plan Code	Accept Qty	Reject Qty	Reject Number	Insp. Stamp
220 Powdercoat Powder Coating	White Gloss(Ref:4.3.5.1) per QSI005 4.3-Alum M113170	0.00							
	Memo START TIME: 2:15pm OVEN TEMPERATURE: 320°F FINISH TIME: 2:45pm	0.00	=> JH	10/03/29		X10LH		Ø	
230 HandFinish Hand Finishing	Wing Walk as per dwg QSI005 4.4 Batch M 113462.	0.00	BR 10-3-30			10LH		Ø.	
	Memo	0.00							
240 QC Quality Control	QC3- Inspect Part Finish	0.00	S 10/03/31						
	Memo	0.00				x10 LH			

Work Order ID 56587

March 2, 2010 7:41:53 AM

Item ID: D350-591-311 **Accept** **Setup Start** **Stop**

Revision ID:

Item Name: Heli-Access-Step, Long LH

Start Date: 3/02/10 **Start Qty:** 10.00 **Cust Item ID:**

Required Date: 3/09/10 **Req'd Qty:** 10.00 **Customer:**

Reference:

Run Start **Stop**

Approvals: **Process Plan:** _____ **Date:** _____ **Tooling:** _____ **Date:** _____

QC: _____ **Date:** _____ **SPC (Y/N):** _____ **Date:** _____

Sequence ID/ Work Center ID	Operation Description	Set Up/ Run Hours	Draw Number	Draw Rev.	Plan Code	Accept Qty	Reject Qty	Reject Number	Insp. Stamp
250	Pick Kit	0.00							
Packaging						10-3-30		100	SP
Packaging	**Memo**	0.00							
260	QC4- 100% Inspect kits for completeness	0.00							
QC	I Put Labe on steps 8 10/3/31	8 10/03/31							
Quality Control	**Memo**	0.00				x10 LH			
270		0.00							
Packaging	Packaging					10-3-31		10	SP
Packaging	**Memo**	0.00							
Packaging	Identify and pack for shipping as per PPPD350-591-311 Location:_____ Rev B								

Work Order ID 56587

March 2, 2010 7:41:53 AM

Item ID: D350-591-311 **Accept** **Setup Start**

Revision ID:

Item Name: Heli-Access-Step, Long LH **Stop**

Start Date: 3/02/10 **Start Qty:** 10.00 **Cust Item ID:**

Required Date: 3/09/10 **Req'd Qty:** 10.00 **Customer:**

Reference:

Run Start

Approvals: **Process Plan:** _____ **Date:** _____ **Tooling:** _____ **Date:** _____

Stop

QC: _____ **Date:** **SPC (Y/N):** _____ **Date:**

Sequence ID/ Work Center ID	Operation Description	Set Up/ Run Hours	Draw Number	Draw Rev.	Plan Code	Accept Qty	Reject Qty	Reject Number	Insp. Stamp
280	QC21- Final Inspection - Work Order Release	0.00							10/04/05
QC Quality Control	**Memo**	0.00							

W 10-04-05

Picklist Print

March 2, 2010 7:41:25 AM

9

Work Order ID: 56587

Parent Item: D350-591-311

Parent Item Name: Heli-Access-Step, Long LH

Start Date: 3/02/10 **Required Date:** 3/09/10

Start Qty: 10.00 **Required Qty:** 10.00

Comments: IPP Rev:A□04.03.22□New issue □KJ/RF
IPP Rev:B 07-06-09 Added D3272-1 JLM□
IPP returned to CHG001 for Eurocopter, ref NCR08-082 LL verifed by:EC

Component Item ID/	Replacement	Mfg/	Bin	Primary	Last	Route	Unit of	Qty on	Remaining	Qty	Date	Status
AN3-35A 62		Purchased	No			260	Each	195.0000	20.0000			
5 410 Bolt										10-3-21	SP	

Warehouse Location	Loc Qty	Loc Code
Main Warehouse		
ST	195	
106993	12	
110467	1	
112314	182	

Component Item ID/	Replacement	Mfg/	Bin	Primary	Last	Route	Unit of	Qty on	Remaining	Qty	Date	Status
AN4-13A 48		Purchased	No			260	Each	208.0000	80.0000	20 8x M4824 M1141008 50x	8x M111477 M114227 4x 10-3-21 SP	
5 410 Bolt												

Warehouse Location	Loc Qty	Loc Code
Main Warehouse		
ST	208	
113359	8	
113749	200	8x
17406	0	
51764	0	

Dart Aerospace Ltd

W/O:		WORK ORDER CHANGES					
DATE	STEP	PROCEDURE CHANGE	By	Date	Qty	Approval Chief Eng / Prod Mgr	Approval QC Inspector

Part No: _____ **PAR #:** _____ **Fault Category:** _____ **NCR:** Yes No **DQA:** _____ **Date:** _____

Resolution: _____ **Disposition:** _____ **QA: N/C Closed:** _____ **Date:** _____

NCR:		WORK ORDER NON-CONFORMANCE (NCR)						
DATE	STEP	Description of NC Section A	Corrective Action Section B			Verification Section C	Approval Chief Eng	Approval QC Inspector
			Initial Chief Eng	Action Description Chief Eng	Sign & Date			

NOTE: Date & initial all entries

H:\fFORMS\Quality Assurance\approved QA\NCRWO RevE

Picklist Print

March 2, 2010 7:41:25 AM

Work Order ID: 56587

Parent Item: D350-591-311

Parent Item Name: Heli-Access-Step, Long LH

Start Date: 3/02/10 **Required Date:** 3/09/10

Comments: IPP Rev:A□04.03.22□New issue □KJ/RF
IPP Rev:B 07-06-09 Added D3272-1 JLM□
IPP returned to CHG001 for Eurocopter, ref NCR08-082 LL verifed by:EC

Start Qty: 10.00 **Required Qty:** 10.00

Component Item ID/	Replacement	Mfg/	Bin	Primary	Last	Route	Unit of	Qty on	Remaining	Qty	Date	Status
AN5-36A x2		Purchased	No			260	Each	115.0000	20.0000			
S +10 Bolt										10-3-31		

Warehouse Location	Loc Qty	Loc Code
Main Warehouse		
ST	115	
109545	11	
110467	7	
110731	4	
112243	20	
112314	23	
112385	50	20

Component Item ID/	Replacement	Mfg/	Bin	Primary	Last	Route	Unit of	Qty on	Remaining	Qty	Date	Status
NAS1149D0363J												
AN960JD10 x4		Purchased	No			260	Each	0.0000	40.0000			
S +10 Washer										M113288	10-3-31	SP
AN960JD416 x16 NAS1149D0463J		Purchased	No			260	Each	0.0000	160.0000			
S +10 Washer										M113700	10-3-31	SP
AN960JD516 x4 NAS1149D0563J		Purchased	No			260	Each	0.0000	40.0000			
S +10 Washer										M113524	10-3-31	SP

QSI OK

Dart Aerospace Ltd

W/O:		WORK ORDER CHANGES					
DATE	STEP	PROCEDURE CHANGE	By	Date	Qty	Approval Chief Eng / Prod Mgr	Approval QC Inspector

Part No: _____ PAR #: _____ Fault Category: _____ NCR: Yes No DQA: _____ Date: _____

Resolution: _____ Disposition: _____ QA: N/C Closed: _____ Date: _____

NCR:		WORK ORDER NON-CONFORMANCE (NCR)						
DATE	STEP	Description of NC Section A	Corrective Action Section B			Verification Section C	Approval Chief Eng	Approval QC Inspector
			Initial Chief Eng	Action Description Chief Eng	Sign & Date			

NOTE: Date & initial all entries

H:\fFORMS\Quality Assurance\approved QA\NCRWO RevE

Picklist Print

March 2, 2010 7:41:25 AM

Work Order ID: 56587

Parent Item: D350-591-311

Parent Item Name: Heli-Access-Step, Long LH

Start Date: 3/02/10 **Required Date:** 3/09/10

Comments: IPP Rev:A 04.03.22 New issue KJ/RF
IPP Rev:B 07-06-09 Added D3272-1 JLM
IPP returned to CHG001 for Eurocopter, ref NCR08-082 LL verifed by:EC

Start Qty: 10.00 **Required Qty:** 10.00

Component Item ID/	Replacement	Mfg/	Bin	Primary	Last	Route	Unit of	Qty on	Remaining	Qty	Date	Status
D2230-3 x4		Manufactured	No			260	Each	178.0000	40.0000			
S +10 Lug										10-3-30	SP	

Warehouse Location	Loc Qty	Loc Code	
Main Warehouse			
ST	7		
50306	5		
51568	2		
Main Warehouse			
ST176	150		
55310	150		40
Main Warehouse			
ST476	21		
55310	21		

D2618 x2		Manufactured	No			260	Each	61.0000	20.0000			
S +10 Bushing										10-3-31	SP	10x

Warehouse Location	Loc Qty	Loc Code	
Main Warehouse			
ST39	61		
50989	61		20

Dart Aerospace Ltd

W/O:		WORK ORDER CHANGES					
DATE	STEP	PROCEDURE CHANGE	By	Date	Qty	Approval Chief Eng / Prod Mgr	Approval QC Inspector

Part No: _____ PAR #: _____ Fault Category: _____ NCR: Yes No DQA: _____ Date: _____

Resolution: _____ Disposition: _____ QA: N/C Closed: _____ Date: _____

NCR:		WORK ORDER NON-CONFORMANCE (NCR)						
DATE	STEP	Description of NC Section A	Corrective Action Section B			Verification Section C	Approval Chief Eng	Approval QC Inspector
			Initial Chief Eng	Action Description Chief Eng	Sign & Date			

NOTE: Date & initial all entries

H:\fFORMS\Quality Assurance\approved QA\NCRWO RevE

Picklist Print

March 2, 2010 7:41:25 AM

Work Order ID: 56587

Parent Item: D350-591-311

Parent Item Name: Heli-Access-Step, Long LH

Start Date: 3/02/10 **Required Date:** 3/09/10

Start Qty: 10.00 **Required Qty:** 10.00

Comments: IPP Rev:A□04.03.22□ □New issue □KJ/RF
IPP Rev:B 07-06-09 Added D3272-1 JLM□
IPP returned to CHG001 for Eurocopter, ref NCR08-082 LL verifed by:EC

Component Item ID/	Replacement	Mfg/	Bin	Primary	Last	Route	Unit of	Qty on	Remaining	Qty	Date	Status
D2856-400	X2 @ 7-25	Manufactured	No			260	f	249.0321	6.0000			
Abraison Strip										10-3-31 SP		

8 used

→ measured 8 ft 3/3

Warehouse Location	Loc Qty	Loc Code	
Main Warehouse			
ST403	249.0320842		
50593	138.592084		
52563	110.44		

Component Item ID/	Replacement	Mfg/	Bin	Primary	Last	Route	Unit of	Qty on	Remaining	Qty	Date	Status
D3065-041		Manufactured	No				Each	47.0000	10.0000		10·03·23	
Step Leg Assembly Hi												

Warehouse Location	Loc Qty	Loc Code	
Main Warehouse			
WA	47		
53795	17		10
55450	30		

Component Item ID/	Replacement	Mfg/	Bin	Primary	Last	Route	Unit of	Qty on	Remaining	Qty	Date	Status
D3066-1		Manufactured	No				Each	16.0000	20.0000		10·03·23	
Spacer												

Warehouse Location	Loc Qty	Loc Code	
Main Warehouse			
ST B56752	16		20
51545	11		
53783	5		

Dart Aerospace Ltd

W/O:		WORK ORDER CHANGES					
DATE	STEP	PROCEDURE CHANGE	By	Date	Qty	Approval Chief Eng / Prod Mgr	Approval QC Inspector

Part No: _____ **PAR #:** _____ **Fault Category:** _____ **NCR:** Yes No **DQA:** _____ **Date:** _____

Resolution: _____ **Disposition:** _____ **QA: N/C Closed:** _____ **Date:** _____

NCR:		WORK ORDER NON-CONFORMANCE (NCR)						
DATE	STEP	Description of NC Section A	Corrective Action Section B			Verification Section C	Approval Chief Eng	Approval QC Inspector
			Initial Chief Eng	Action Description Chief Eng	Sign & Date			

NOTE: Date & initial all entries

H:\fFORMS\Quality Assurance\approved QA\NCRWO RevE

Picklist Print

March 2, 2010 7:41:27 AM

Work Order ID: 56587

Parent Item: D350-591-311

Parent Item Name: Heli-Access-Step, Long LH

Start Date: 3/02/10 **Required Date:** 3/09/10

Start Qty: 10.00 **Required Qty:** 10.00

Comments: IPP Rev:A□04.03.22□New issue □KJ/RF
IPP Rev:B 07-06-09 Added D3272-1 JLM□□
IPP returned to CHG001 for Eurocopter, ref NCR08-082 LL verifed by:EC

Component Item ID/	Replacement	Mfg/	Bin	Primary	Last	Route	Unit of	Qty on	Remaining	Qty	Date	Status
D3067-1		Manufactured	No			110	Each	27.0000	10.0000			
End Plate											10·03·18	

Warehouse Location	Loc Qty	Loc Code
Main Warehouse		
ST	27	
53784	27	

D3067-1		Manufactured	No			260	Each	27.0000	10.0000			
End Plate											10·03-24	

Warehouse Location	Loc Qty	Loc Code
Main Warehouse		
ST 57011	27	
53784	27	

D3219-1		Manufactured	No				Each	32.0000	20.0000			
Plate											10·03·18	

Warehouse Location	Loc Qty	Loc Code
Main Warehouse		
ST	32	
53789	32	

Dart Aerospace Ltd

W/O:		WORK ORDER CHANGES					
DATE	STEP	PROCEDURE CHANGE	By	Date	Qty	Approval Chief Eng / Prod Mgr	Approval QC Inspector

Part No: _____ **PAR #:** _____ **Fault Category:** _____ **NCR:** Yes No **DQA:** _____ **Date:** _____

Resolution: _____ **Disposition:** _____ **QA: N/C Closed:** _____ **Date:** _____

NCR:		WORK ORDER NON-CONFORMANCE (NCR)						
DATE	STEP	Description of NC Section A	Corrective Action Section B			Verification Section C	Approval Chief Eng	Approval QC Inspector
			Initial Chief Eng	Action Description Chief Eng	Sign & Date			

NOTE: Date & initial all entries

H:\fFORMS\Quality Assurance\approved QA\NCRWO RevE

Picklist Print

March 2, 2010 7:41:27 AM

Work Order ID: 56587

Parent Item: D350-591-311

Parent Item Name: Heli-Access-Step, Long LH

Start Date: 3/02/10 **Required Date:** 3/09/10

Comments: IPP Rev:A□04.03.22□New issue □KJ/RF
IPP Rev:B 07-06-09 Added D3272-1 JLM□
IPP returned to CHG001 for Eurocopter, ref NCR08-082 LL verifed by:EC

Start Qty: 10.00 **Required Qty:** 10.00

Component Item ID/	Replacement	Mfg/	Bin	Primary	Last	Route	Unit of	Qty on	Remaining	Qty	Date	Status
D3235-1 X2		Manufactured	No			260	Each	107.0000	20.0000	11X		
S +10 Mounting Lug										B55315	10-3-30	S

Warehouse Location	Loc Qty	Loc Code	
Main Warehouse			
471	60		
55315	60		
Main Warehouse			
ST	47		
45398	4		
54756	43		9

D3272-1		Manufactured	No			110	Each	0.0000	10.0000	10-03-16	356588
Step											
D3278-041 X1		Manufactured	No			260	Each	63.0000	10.0000	10-3-30	S (10X)
S +10 Support Assembly											

Warehouse Location	Loc Qty	Loc Code	
Main Warehouse			
ST	23		
53227	23		6
Main Warehouse			
ST471	40		
55318	40		4

Dart Aerospace Ltd

W/O:		WORK ORDER CHANGES					
DATE	STEP	PROCEDURE CHANGE	By	Date	Qty	Approval Chief Eng / Prod Mgr	Approval QC Inspector

Part No: _____ **PAR #:** _____ **Fault Category:** _____ **NCR:** Yes No **DQA:** _____ **Date:** _____

Resolution: _____ **Disposition:** _____ **QA: N/C Closed:** _____ **Date:** _____

NCR:		WORK ORDER NON-CONFORMANCE (NCR)						
DATE	STEP	Description of NC Section A	Corrective Action Section B			Verification Section C	Approval Chief Eng	Approval QC Inspector
			Initial Chief Eng	Action Description Chief Eng	Sign & Date			

NOTE: Date & initial all entries

H:\fFORMS\Quality Assurance\approved QA\NCRWO RevE

Picklist Print

March 2, 2010 7:41:28 AM

Work Order ID: 56587

Parent Item: D350-591-311

Parent Item Name: Heli-Access-Step, Long LH

Start Date: 3/02/10 **Required Date:** 3/09/10

Comments: IPP Rev:A□04.03.22□New issue □KJ/RF
IPP Rev:B 07-06-09 Added D3272-1 JLM□
IPP returned to CHG001 for Eurocopter, ref NCR08-082 LL verifed by:EC

Start Qty: 10.00 **Required Qty:** 10.00

Component Item ID/	Replacement	Mfg/	Bin	Primary	Last	Route	Unit of	Qty on	Remaining	Qty	Date	Status
MS20600-AD4W4		Purchased	No			180	Each	995.0000	160.0000		10-03-24	

Rivets

Warehouse Location	Loc Qty	Loc Code	
Main Warehouse			
ST	995		
110731	215		
111359	46		
111477	74		
112314	136		
112385	24		
113368	500		160

Dart Aerospace Ltd

W/O:		WORK ORDER CHANGES					
DATE	STEP	PROCEDURE CHANGE	By	Date	Qty	Approval Chief Eng / Prod Mgr	Approval QC Inspector

Part No: _____ **PAR #:** _____ **Fault Category:** _____ **NCR:** Yes No **DQA:** _____ **Date:** _____

Resolution: _____ **Disposition:** _____ **QA: N/C Closed:** _____ **Date:** _____

NCR:		WORK ORDER NON-CONFORMANCE (NCR)						
DATE	STEP	Description of NC Section A	Corrective Action Section B			Verification Section C	Approval Chief Eng	Approval QC Inspector
			Initial Chief Eng	Action Description Chief Eng	Sign & Date			

NOTE: Date & initial all entries

H:\fFORMS\Quality Assurance\approved QA\NCRWO RevE

Picklist Print

March 2, 2010 7:41:28 AM

Work Order ID: 56587

Parent Item: D350-591-311

Parent Item Name: Heli-Access-Step, Long LH

Start Date: 3/02/10 **Required Date:** 3/09/10

Comments: IPP Rev:A□04.03.22□New issue □KJ/RF
IPP Rev:B 07-06-09 Added D3272-1 JLM□
IPP returned to CHG001 for Eurocopter, ref NCR08-082 LL verifed by:EC

Start Qty: 10.00 **Required Qty:** 10.00

Component Item ID/	Replacement	Mfg/	Bin	Primary	Last	Route	Unit of	Qty on	Remaining	Qty	Date	Status
MS21042L3 ~~L2~~		Purchased	No			260	Each	2,516.000	20.0000			
10-3-31	sl	10x										

S +10 Nut

Warehouse Location	Loc Qty	Loc Code	
Main Warehouse			
ST	2510		
110844	35		
111274	27		
111668	52		
112314	285		
112385	393		
113523	18		
~~113537~~	700		20
113644	1000		
Main Warehouse			
ST139	6		
111668	6		

Dart Aerospace Ltd

W/O:		WORK ORDER CHANGES					
DATE	STEP	PROCEDURE CHANGE	By	Date	Qty	Approval Chief Eng / Prod Mgr	Approval QC Inspector

Part No: _____ **PAR #:** _____ **Fault Category:** _____ **NCR:** Yes No **DQA:** _____ **Date:** _____

Resolution: _____ **Disposition:** _____ **QA: N/C Closed:** _____ **Date:** _____

NCR:		WORK ORDER NON-CONFORMANCE (NCR)						
DATE	STEP	Description of NC Section A	Corrective Action Section B			Verification Section C	Approval Chief Eng	Approval QC Inspector
			Initial Chief Eng	Action Description Chief Eng	Sign & Date			

NOTE: Date & initial all entries

H:\fFORMS\Quality Assurance\approved QA\NCRWO RevE

Picklist Print

March 2, 2010 7:41:36 AM

Work Order ID: 56587

Parent Item: D350-591-311

Parent Item Name: Heli-Access-Step, Long LH

Start Date: 3/02/10 **Required Date:** 3/09/10

Comments: IPP Rev:A□04.03.22□New issue □KJ/RF
IPP Rev:B 07-06-09 Added D3272-1 JLM□
IPP returned to CHG001 for Eurocopter, ref NCR08-082 LL verifed by:EC

Start Qty: 10.00 **Required Qty:** 10.00

Component Item ID/	Replacement	Mfg/	Bin	Primary	Last	Route	Unit of	Qty on	Remaining	Qty	Date	Status
MS21042L4 ~~8~~		Purchased	No			260	Each	1,965.000	80.0000			
S 40 Nut										10-3-30		

Warehouse Location	Loc Qty	Loc Code	
Main Warehouse			
ST	1965		
102552	6		
104248	6		
110507	184		
111827	775		
113422	994		80
15924	0		

Component Item ID/	Replacement	Mfg/	Bin	Primary	Last	Route	Unit of	Qty on	Remaining	Qty	Date	Status
MS21042L5 ~~18~~ 12		Purchased	No			110	Each	391.0000	20.0000			
S 40 Nut										10-3-30	50	(10)

Warehouse Location	Loc Qty	Loc Code	
Main Warehouse			
ST	390		
110382	10		
111636	1		
112314	16		
113523	163		20
113537	200		
Main Warehouse			
ST139	1		
112314	1		

Dart Aerospace Ltd

W/O:		WORK ORDER CHANGES					
DATE	STEP	PROCEDURE CHANGE	By	Date	Qty	Approval Chief Eng / Prod Mgr	Approval QC Inspector

Part No: _____ **PAR #:** _____ **Fault Category:** _____ **NCR:** Yes No **DQA:** _____ **Date:** _____

Resolution: _____ **Disposition:** _____ **QA: N/C Closed:** _____ **Date:** _____

NCR:		WORK ORDER NON-CONFORMANCE (NCR)						
DATE	STEP	Description of NC Section A	Corrective Action Section B			Verification Section C	Approval Chief Eng	Approval QC Inspector
			Initial Chief Eng	Action Description Chief Eng	Sign & Date			

NOTE: Date & initial all entries

H:\fFORMS\Quality Assurance\approved QA\NCRWO RevE

DESIGN	DRAWN BY	DART AEROSPACE LTD HAWKESBURY, ONTARIO, CANADA	
CHECKED	APPROVED	DRAWING NO. D3272	REV. B SHEET 1 OF 3
DATE 07.05.18		TITLE STEP ASSEMBLY, HI LONG	SCALE NTS

A	04.03.01	NEW ISSUE
B	07.05.18	D3272–1 WAS D2622–120

RELEASED
07 06 04

QTY -041	QTY -042	PART NUMBER	DESCRIPTION
X		**D3272-041**	**STEP ASSEMBLY, HIGH LONG (LH)**
	X	**D3272-042**	**STEP ASSEMBLY, HIGH LONG (RH)**
1	1	D3065-041	LEG ASSEMBLY
2	2	D3066-1	SPACER
2	2	D3067-1	END PLATE
2	2	D3219-1	SUPPORT
1	1	D3272-1	STEP
16	16	MS20600AD4W4	RIVET

GENERAL NOTES:

1) D3272-041 SHOWN. FOR D3272-042, INSTALL D3219-1 SUPPORT OPPOSITE SIDE
2) WELD PER DART QSI 004
3) FINISH: CHEMICAL CONVERSION COAT PER DART QSI 005.4.1
   POWDER COAT ASSEMBLY WHITE (4.3.5.1) PER DART QSI 005 4.3
   BLACK ANTI-SKID PAINT PER DART QSI 005 4.4
4) TOLERANCES ARE PER DART QSI 018 UNLESS OTHERWISE NOTED.
5) ALL DIMENSIONS ARE IN INCHES UNLESS OTHERWISE NOTED.
6) BREAK ALL SHARP EDGES 0.005 TO 0.010 MAX.

Copyright © 2004 by DART AEROSPACE LTD
THIS DOCUMENT IS PRIVATE AND CONFIDENTIAL AND IS SUPPLIED ON THE EXPRESS CONDITION THAT IT IS NOT TO BE USED FOR ANY PURPOSE OR COPIED OR COMMUNICATED TO ANY OTHER PERSON WITHOUT WRITTEN PERMISSION FROM DART AEROSPACE LTD.

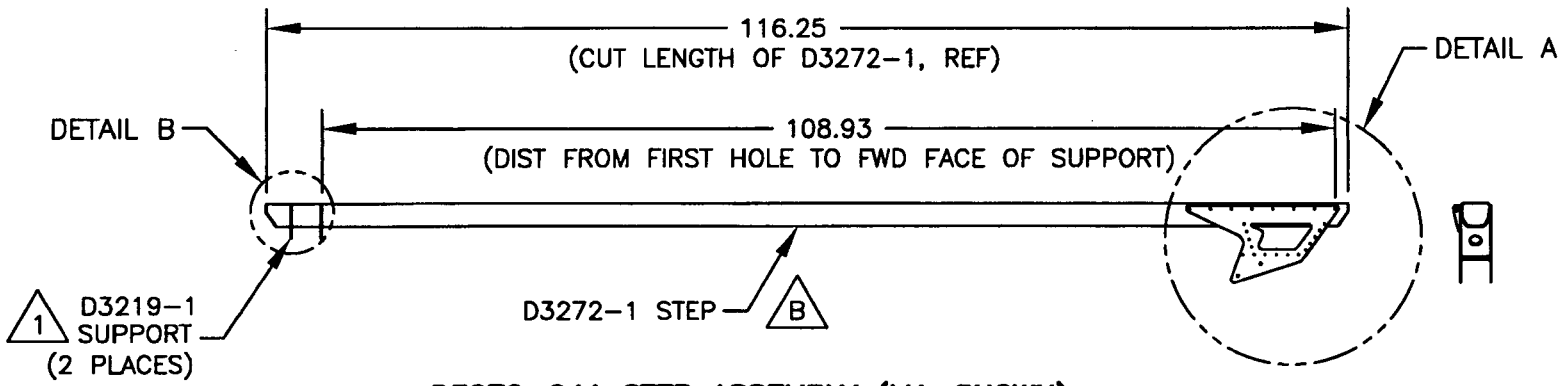

D3272-041 STEP ASSEMBLY (LH, SHOWN)

D3272-042 STEP ASSEMBLY (RH, OPPOSITE)

w/o 56587

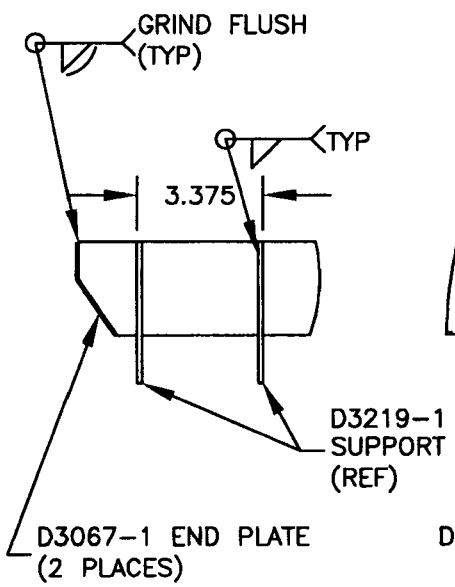

DETAIL B
(SCALE 1:5)

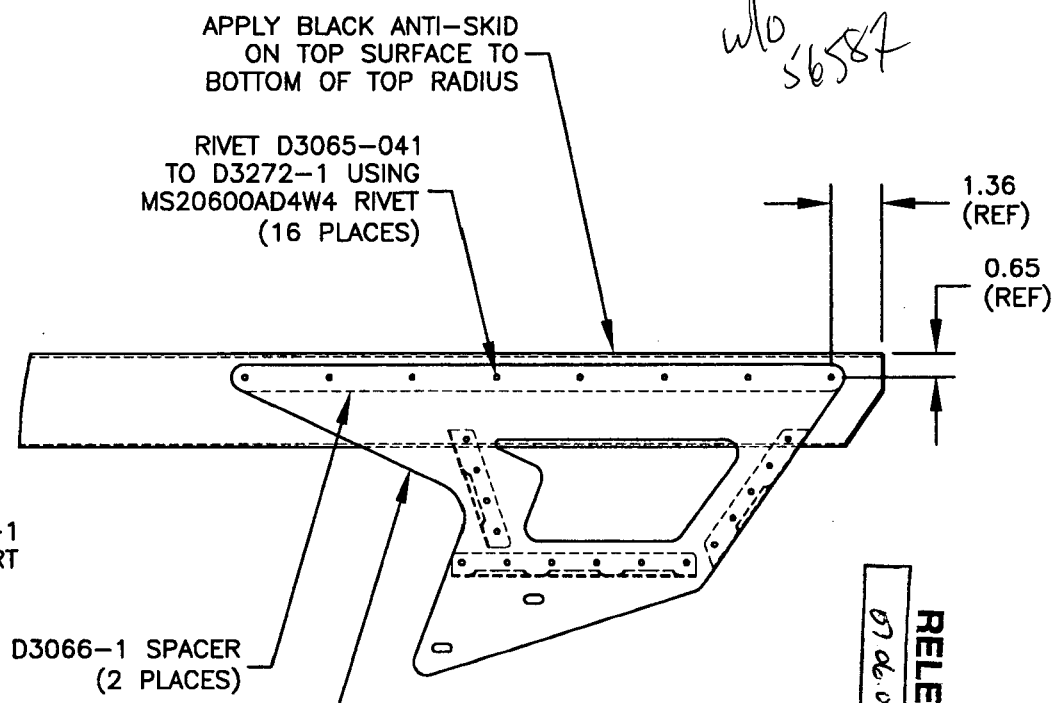

DETAIL A
(SCALE 1:5)

RELEASED
07.06.04

DESIGN	DRAWN BY	DART AEROSPACE LTD HAWKESBURY, ONTARIO, CANADA	
CHECKED	APPROVED	DRAWING NO. D3272	REV. B
DATE 07.05.18		TITLE STEP ASSEMBLY, HI LONG	SHEET 2 OF 3 SCALE 1:20

Copyright © 2004 by DART AEROSPACE LTD

THIS DOCUMENT IS PRIVATE AND CONFIDENTIAL AND IS SUPPLIED ON THE EXPRESS CONDITION THAT IT IS NOT TO BE USED FOR ANY PURPOSE OR COPIED OR COMMUNICATED TO ANY OTHER PERSON WITHOUT WRITTEN PERMISSION FROM DART AEROSPACE LTD.

DESIGN	DRAWN BY	DART AEROSPACE LTD HAWKESBURY, ONTARIO, CANADA	
CHECKED	APPROVED	DRAWING NO. D3272	REV. B SHEET 3 OF 3
DATE 07.05.18		TITLE STEP ASSEMBLY, HI LONG	SCALE 1:20

RELEASED
07.06.04

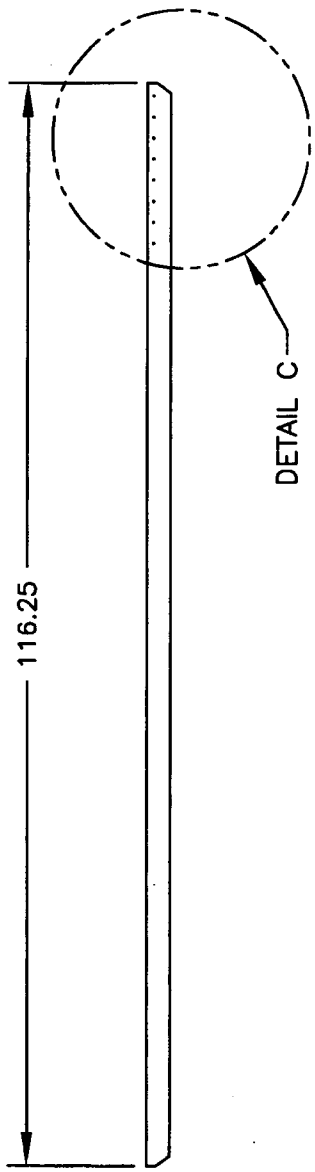

B D3272-1 STEP
(MAKE FROM D2622-120 STEP EXTRUSION)

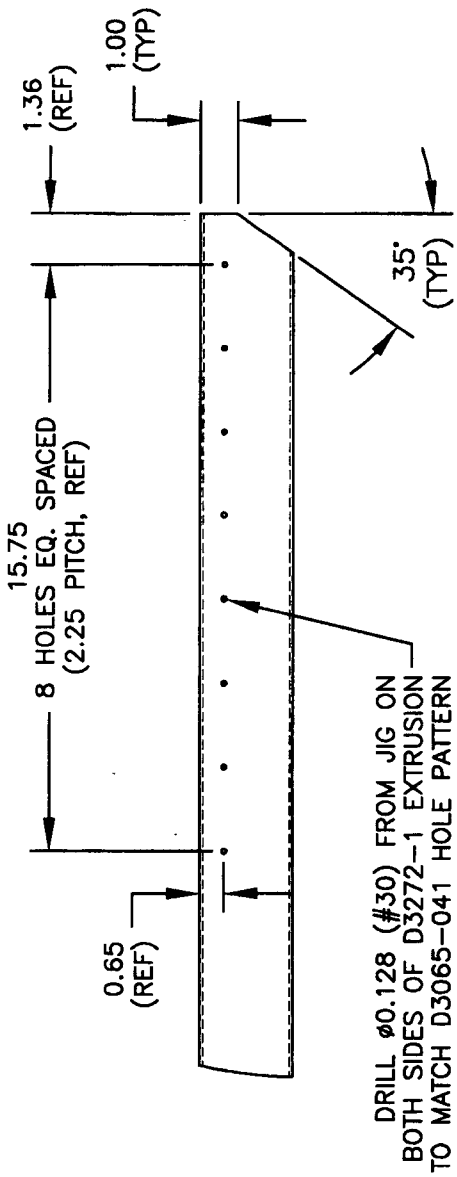

DETAIL C
(SCALE 1:5)

Copyright © 2004 by DART AEROSPACE LTD
THIS DOCUMENT IS PRIVATE AND CONFIDENTIAL AND IS SUPPLIED ON THE EXPRESS CONDITION THAT IT IS NOT TO BE USED FOR ANY PURPOSE OR COPIED OR COMMUNICATED TO ANY OTHER PERSON WITHOUT WRITTEN PERMISSION FROM DART AEROSPACE LTD.

Qty -211	Qty -212	Qty -213	Qty -214	Qty -215	Qty -216	Qty -311	Qty -312	Part Number	Description
X								D350-591-211	***Heli-Access-Step***™, Long Step – High Skid, LH
	X							D350-591-212	***Heli-Access-Step***™, Long Step – High Skid, RH
		X						D350-591-213	***Heli-Access-Step***™, Short Step – High Skid, LH
			X					D350-591-214	***Heli-Access-Step***™, Short Step – High Skid, RH
				X				D350-591-215	***Heli-Access-Step***™, Short Step – Low Skid, LH
					X			D350-591-216	***Heli-Access-Step***™, Short Step – Low Skid, RH
						X		D350-591-311	***Heli-Access-Step***™, Long Step – High Skid, LH
							X	D350-591-312	***Heli-Access-Step***™, Long Step – High Skid, RH
1								D3070-041	STEP ASSEMBLY (HIGH-LONG, LH)
	1							D3070-042	STEP ASSEMBLY (HIGH-LONG, RH)
		1						D3078-041	STEP ASSEMBLY (HIGH-SHORT, LH)
			1					D3078-042	STEP ASSEMBLY (HIGH-SHORT, RH)
				1				D3168-041	STEP ASSEMBLY (LOW-SHORT, LH)
					1			D3168-042	STEP ASSEMBLY (LOW-SHORT, RH)
						1		D3272-041	STEP ASSEMBLY (HIGH-LONG, LH)
							1	D3272-042	STEP ASSEMBLY (HIGH-LONG, RH)
4	4							D2182B035	RUBBER CUSHION
		2	2	2	2			D2230-1	MOUNTING LUG
		2	2	2	2	4	4	D2230-3	MOUNTING LUG
8	8							D2274	RADIUS BLOCK
						2	2	D2618	BUSHING
4	4	4	4	4	4			D2732-030	CUSHION
2	2	1	1	1	1	2	2	D2856-400-720	ABRASION STRIP
2	2							D3064-1	CLAMP
1	1							D3079-041	SUPPORT ASSEMBLY
4	4							D3080-1	CLAMP
						2	2	D3235-1	MOUNTING LUG
						1	1	D3278-041	SUPPORT ASSEMBLY
2	2	2	2	2	2	2	2	AN3-35A	BOLT
10	10	2	2	2	2			AN4-11A	BOLT
		4	4	4	4	8	8	AN4-13A	BOLT
						2	2	AN5-36A	BOLT
4	4	4	4	4	4	4	4	AN960JD10	WASHER
20	20	12	12	12	12	16	16	AN960JD416	WASHER
						4	4	AN960JD516	WASHER
2	2	2	2	2	2	2	2	MS21042L3	NUT
10	10	6	6	6	6	8	8	MS21042L4	NUT
						2	2	MS21042L5	NUT
						1	1	*DSI 9410-011	STEP MODIFICATION KIT

DSI 9410-011 Step Modification Kits are provided with all D350-591-311 and D350-591-312 Steps. This kit is provided as an option for the installer and is therefore **NOT REQUIRED** to complete the installation of the D350-591-311 or D350-591-312 Steps. Refer to Figure 21 for installation of the DSI 9410-011 Kit.

• COPYRIGHT © 1993 BY DART AEROSPACE LTD •
THIS DOCUMENT IS PRIVATE AND CONFIDENTIAL AND IS SUPPLIED ON THE EXPRESS CONDITION THAT IT IS NOT TO BE USED FOR ANY PURPOSE OR COPIED OR COMMUNICATED TO ANY OTHER PERSON WITHOUT WRITTEN PERMISSION FROM DART AEROSPACE LTD.

Dart Aerospace Ltd

W/O:		WORK ORDER CHANGES					
DATE	STEP	PROCEDURE CHANGE	By	Date	Qty	Approval Chief Eng / Prod Mgr	Approval QC Inspector

Part No: _____ **PAR #:** _____ **Fault Category:** _____ **NCR:** Yes No **DQA:** _____ **Date:** _____

Resolution: _____ **Disposition:** _____ **QA: N/C Closed:** _____ **Date:** _____

NCR:		WORK ORDER NON-CONFORMANCE (NCR)						
DATE	STEP	Description of NC Section A	Corrective Action Section B			Verification Section C	Approval Chief Eng	Approval QC Inspector
			Initial Chief Eng	Action Description Chief Eng	Sign & Date			

NOTE: Date & initial all entries

H:\fFORMS\Quality Assurance\approved QA\NCRWO RevE